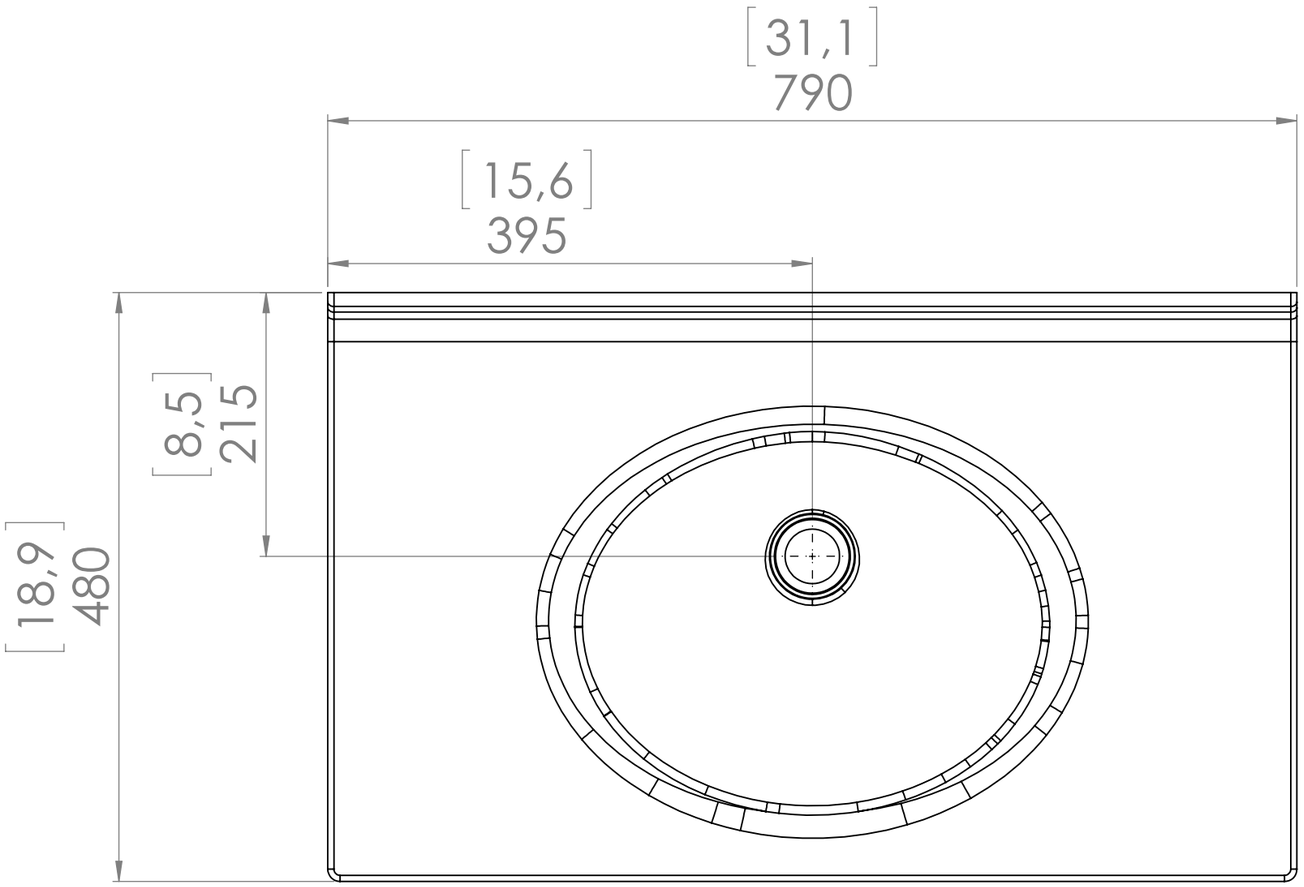
[31,1]
790
[15,6]
395
[8,5]
215
[18,9]
480

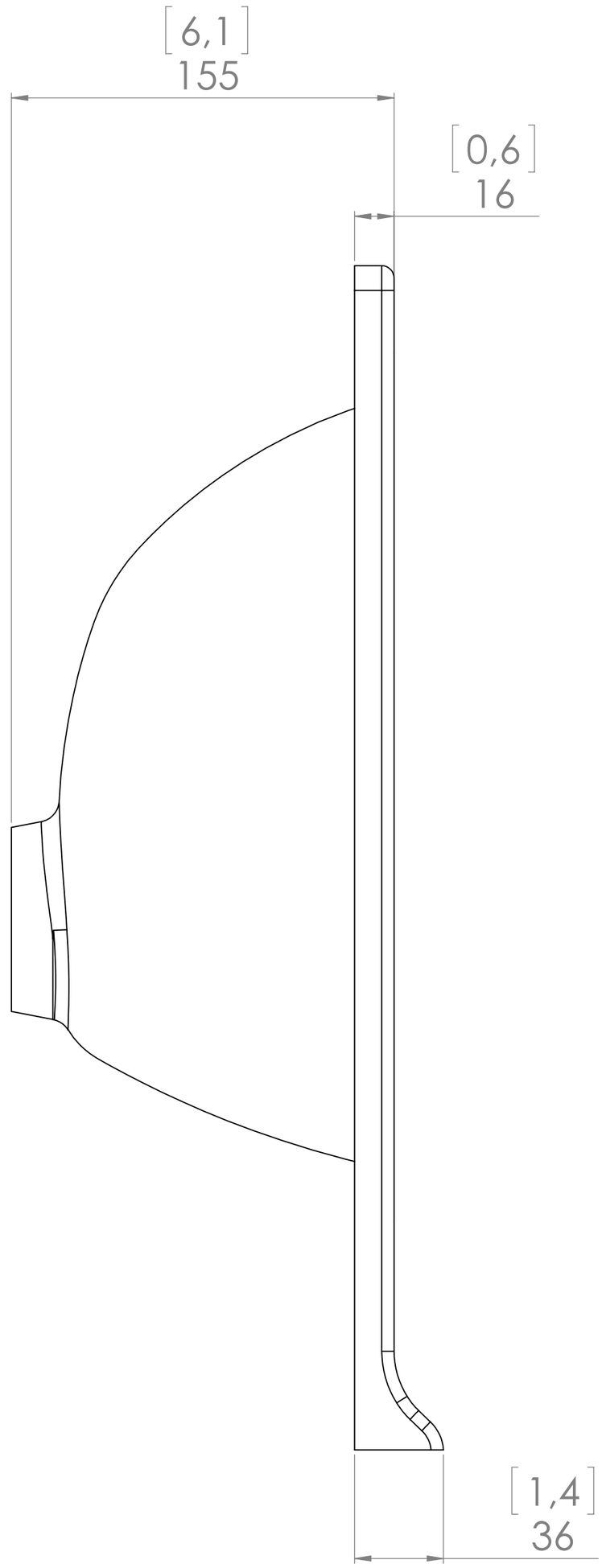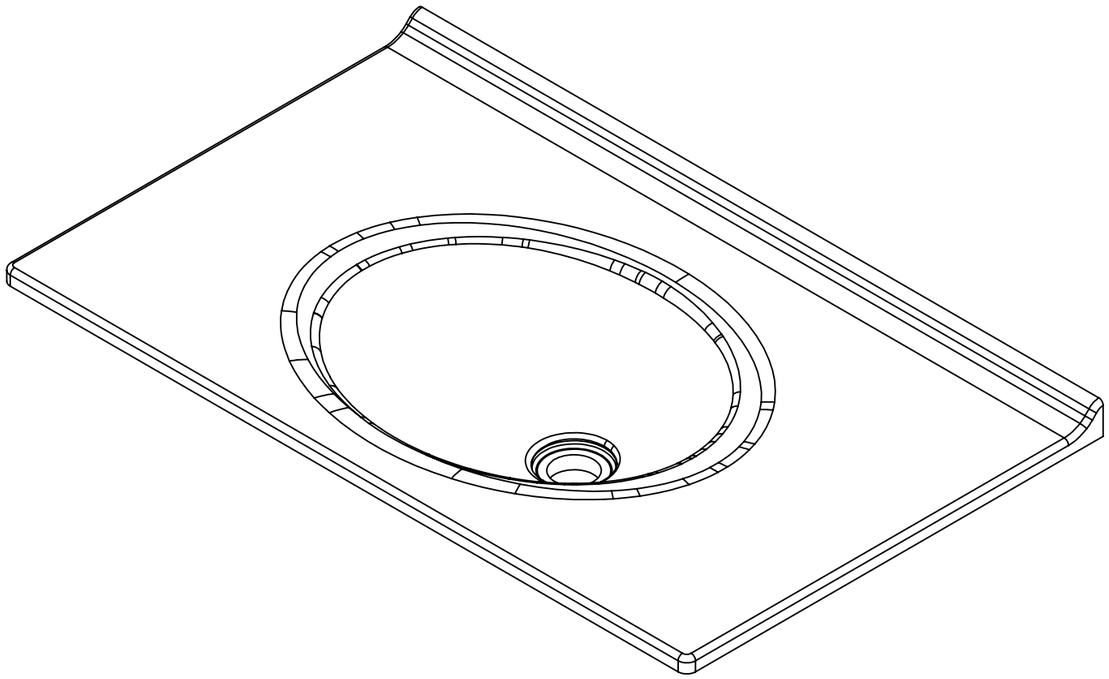
[6,1]
155
[0,6]
16
[1,4]
36